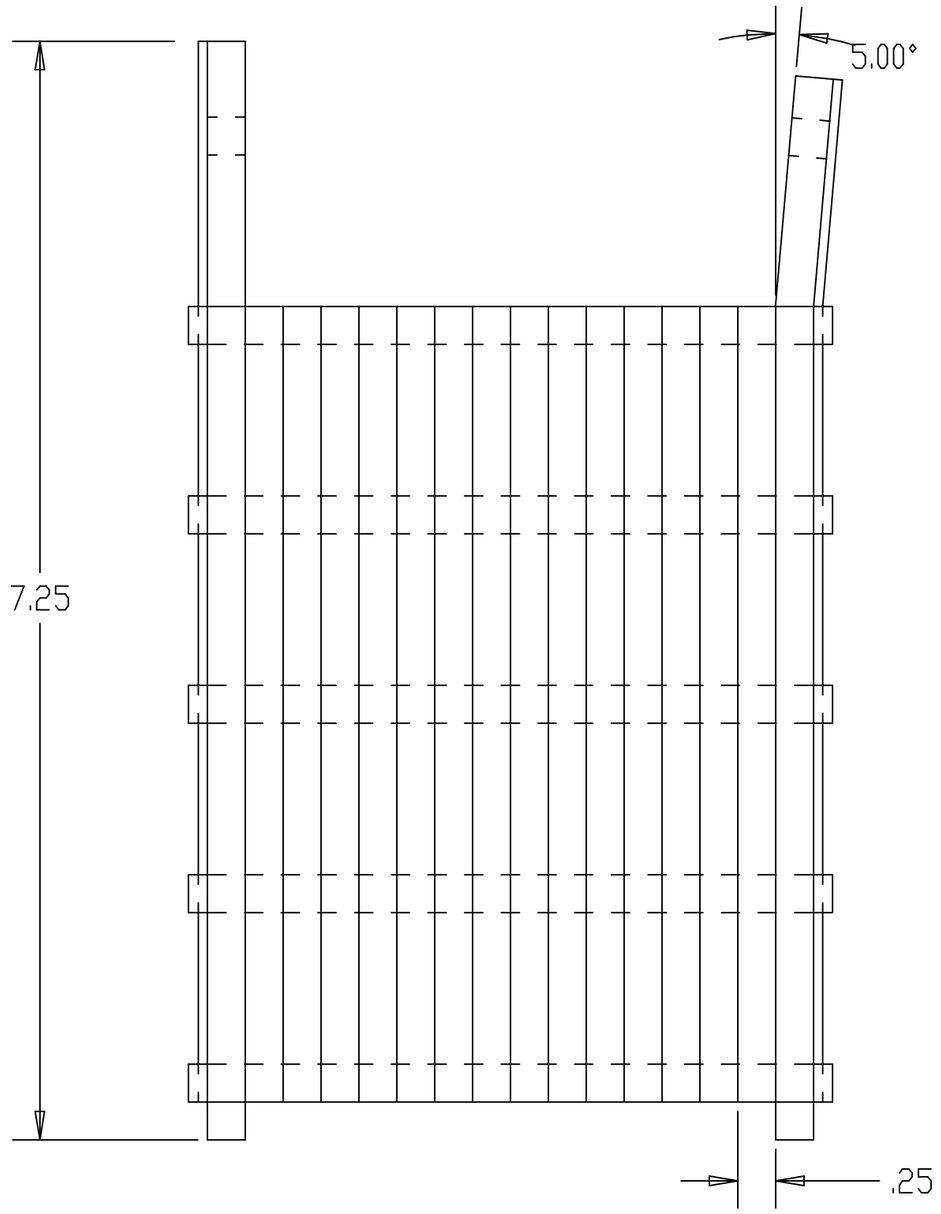

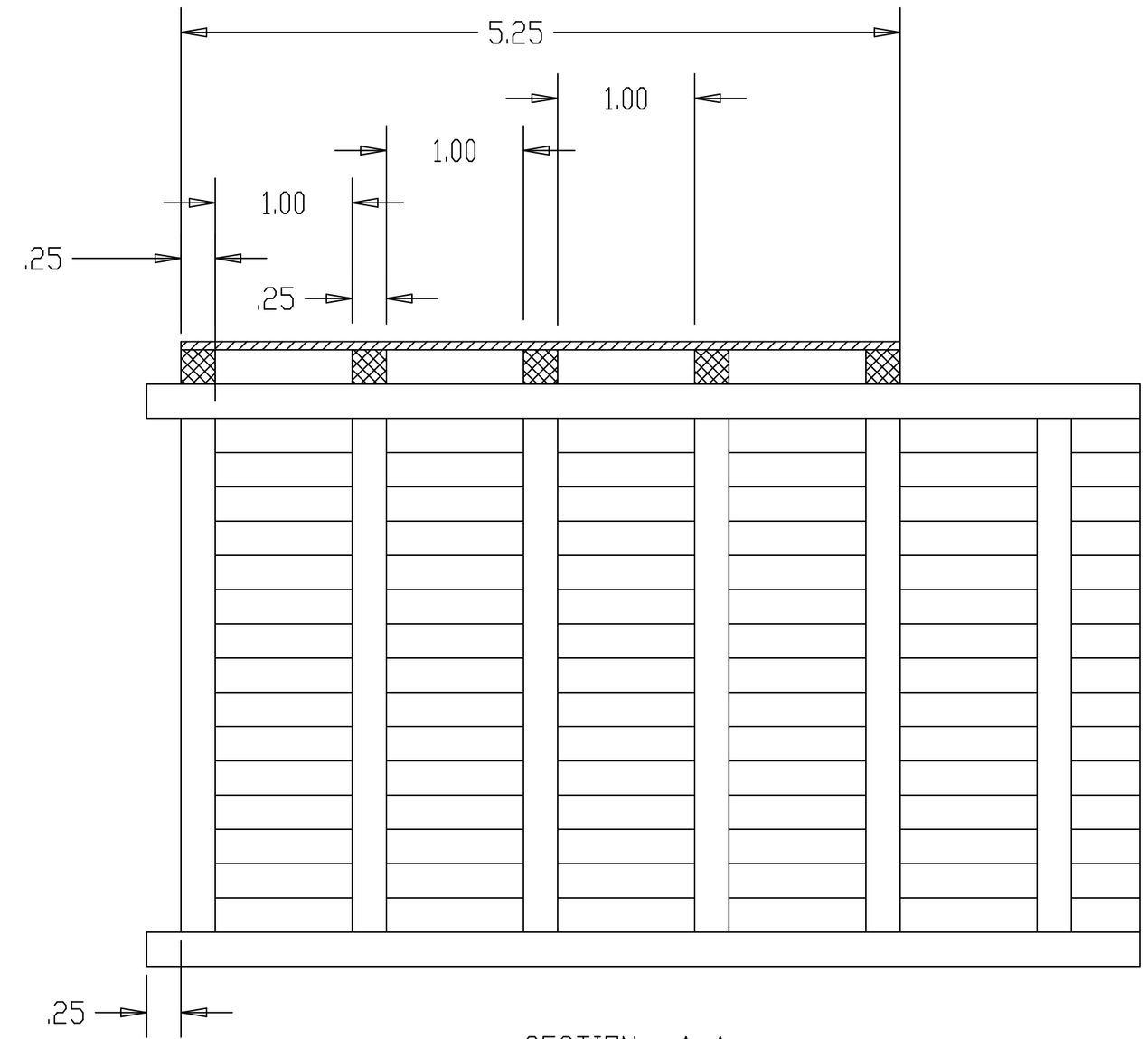

SECTION A-A

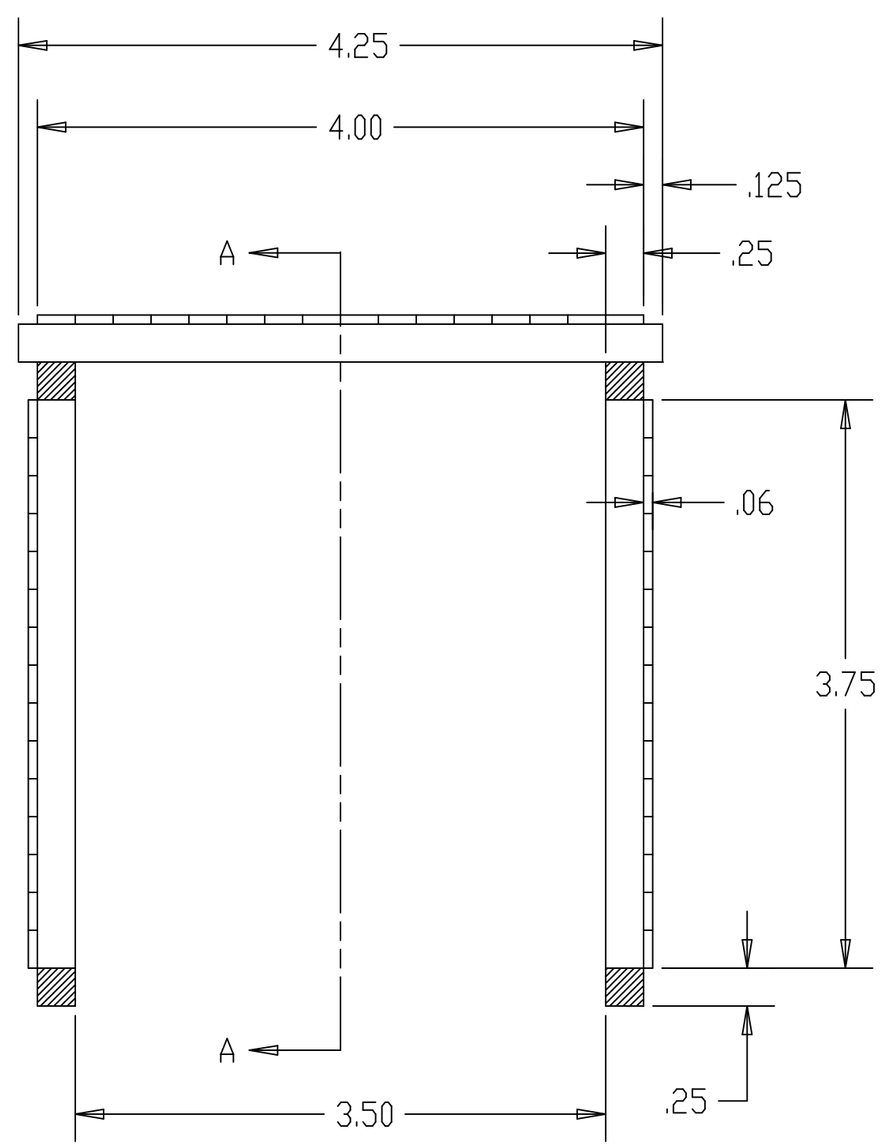
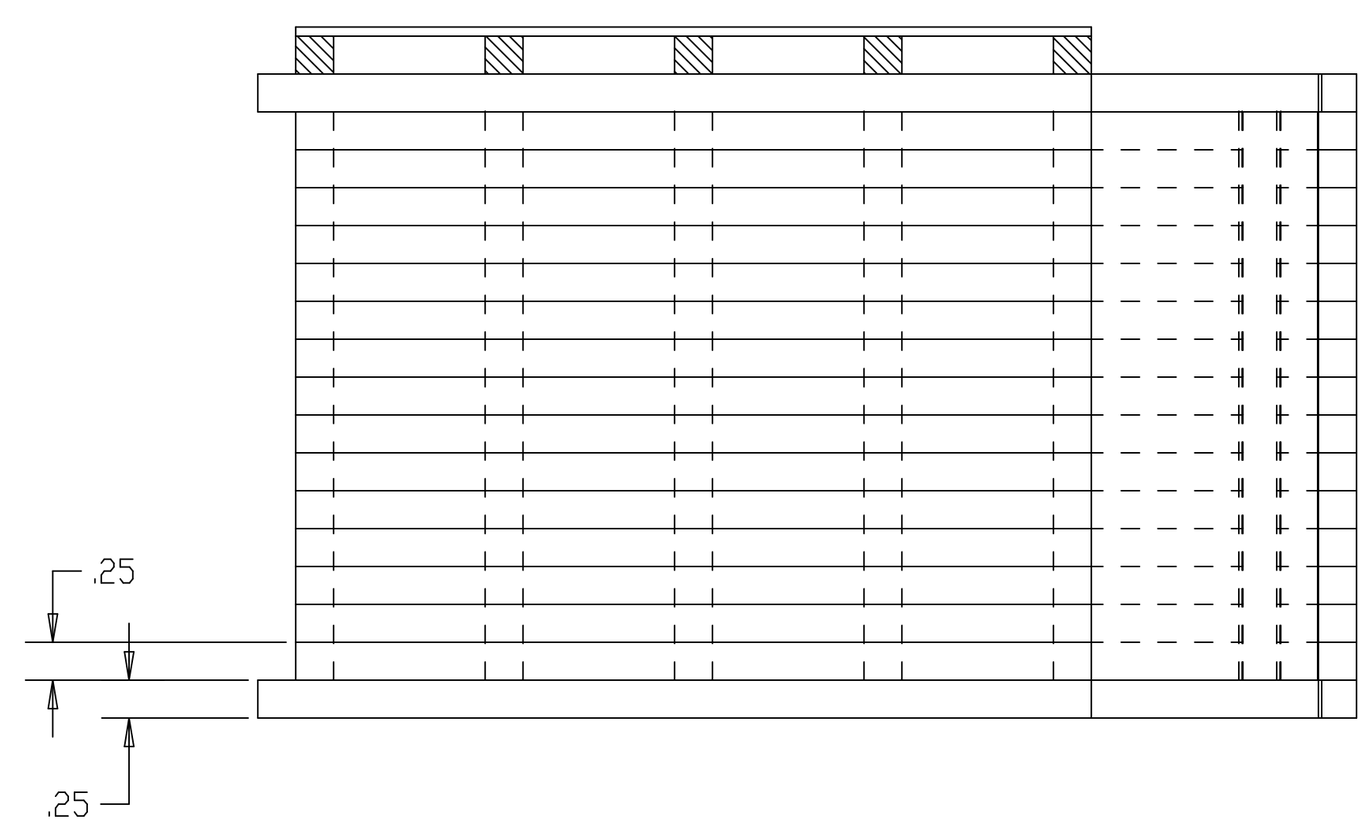
Wagon Creek Road Tunnel Portal
Scale: Full
Date: 4-9-06